# J3/DR-3P-630-R
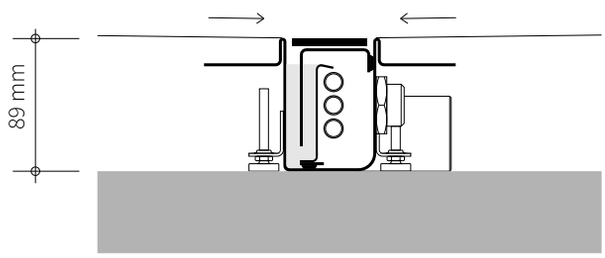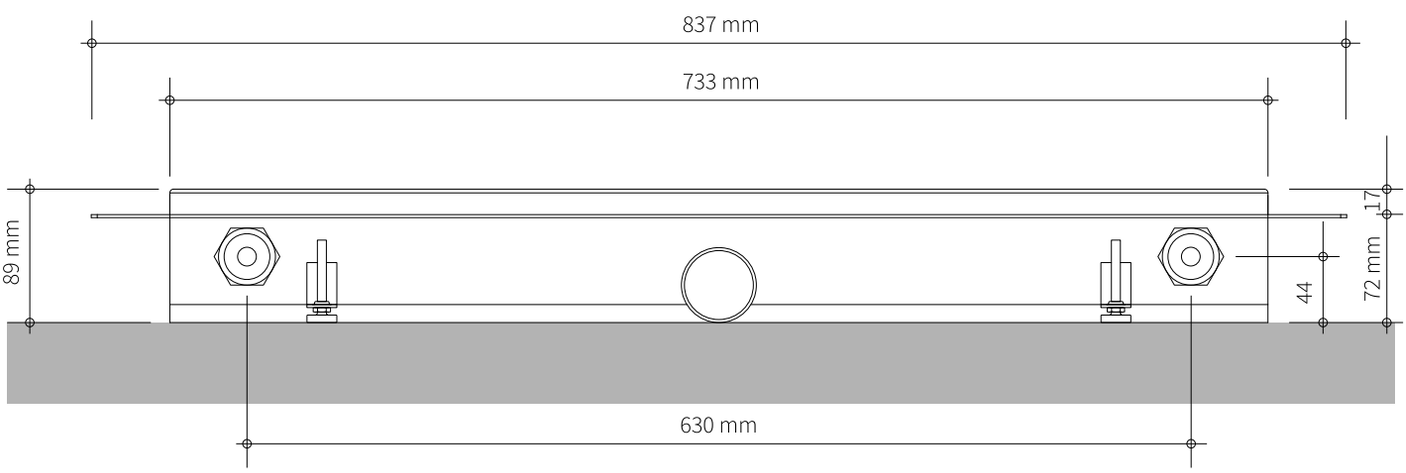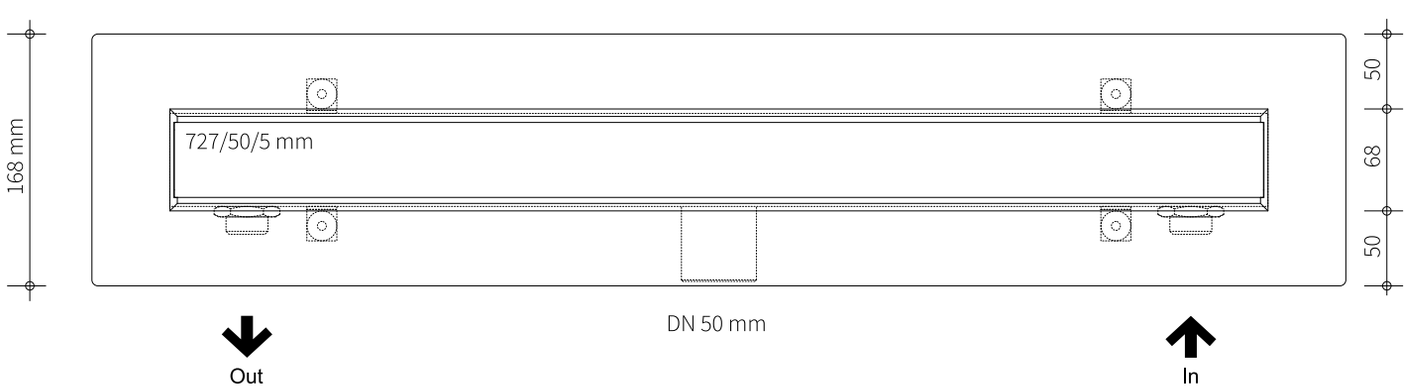
Joulia SA / Vers. April 2018