joulia
SWITZERLAND

J3/DR-5P-630-W
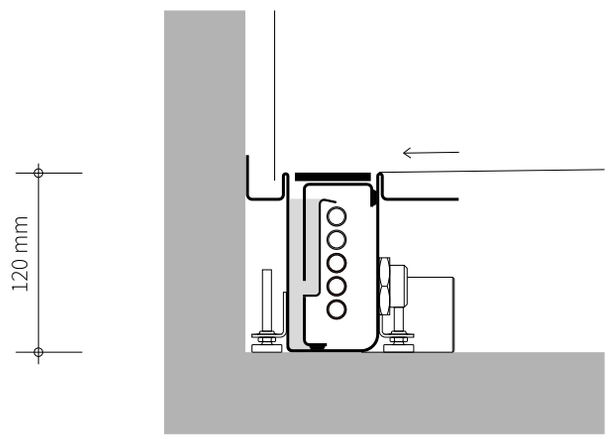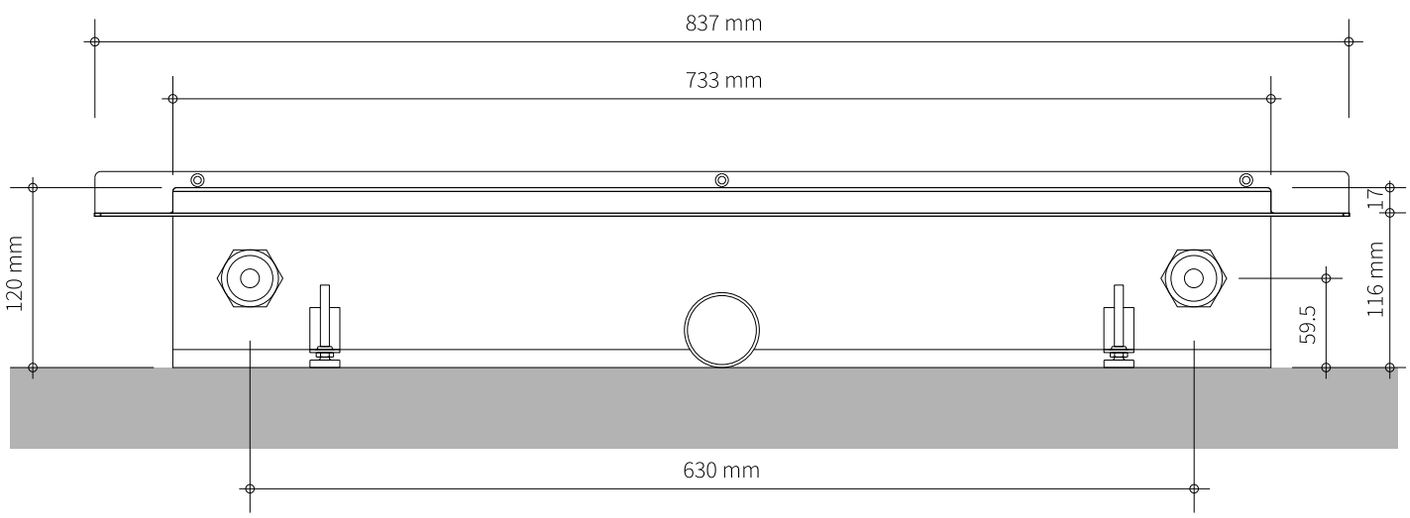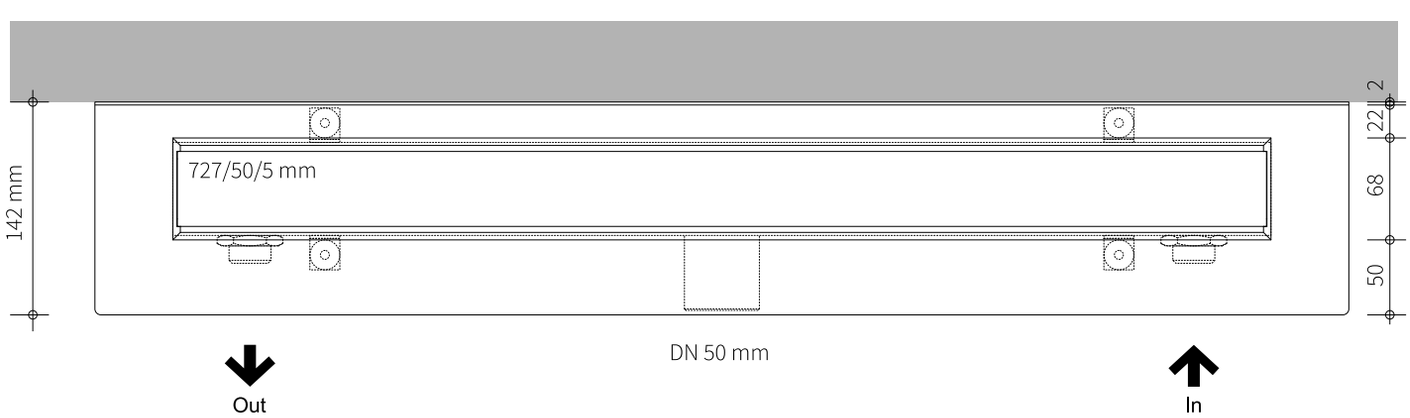
Joulia SA / Vers. April 2018