J3/DR-5P-630-R
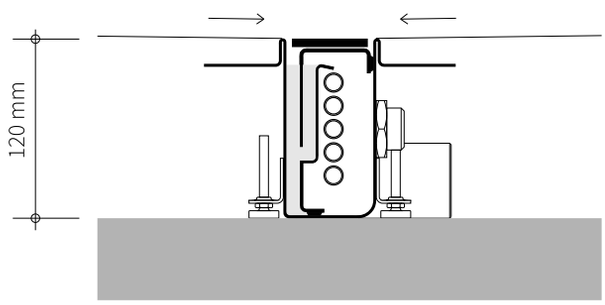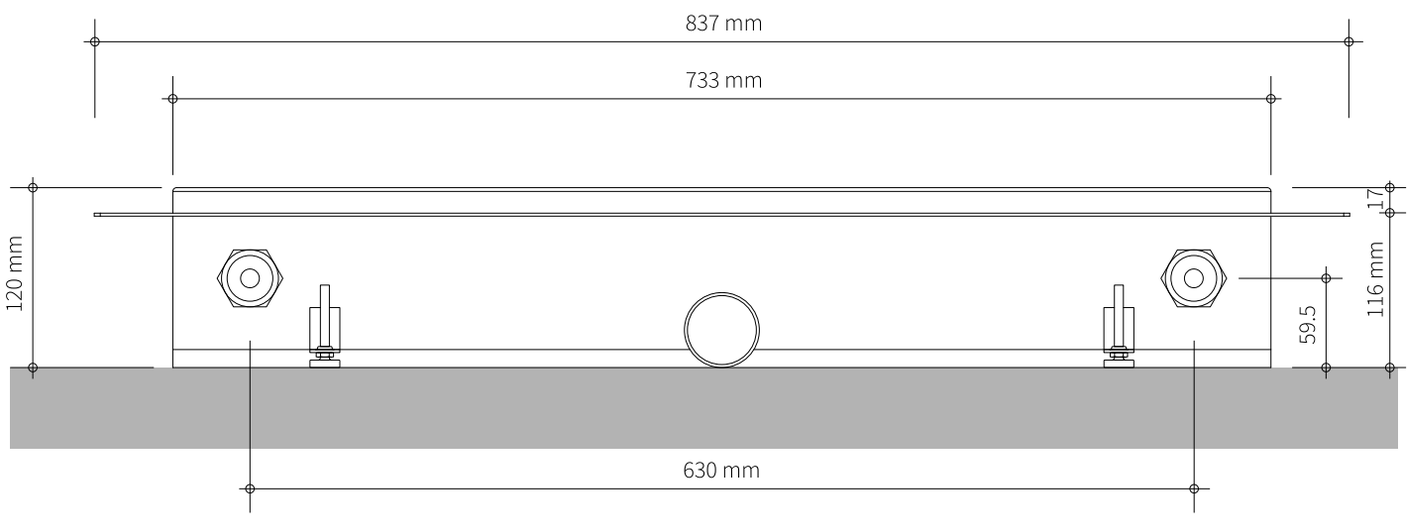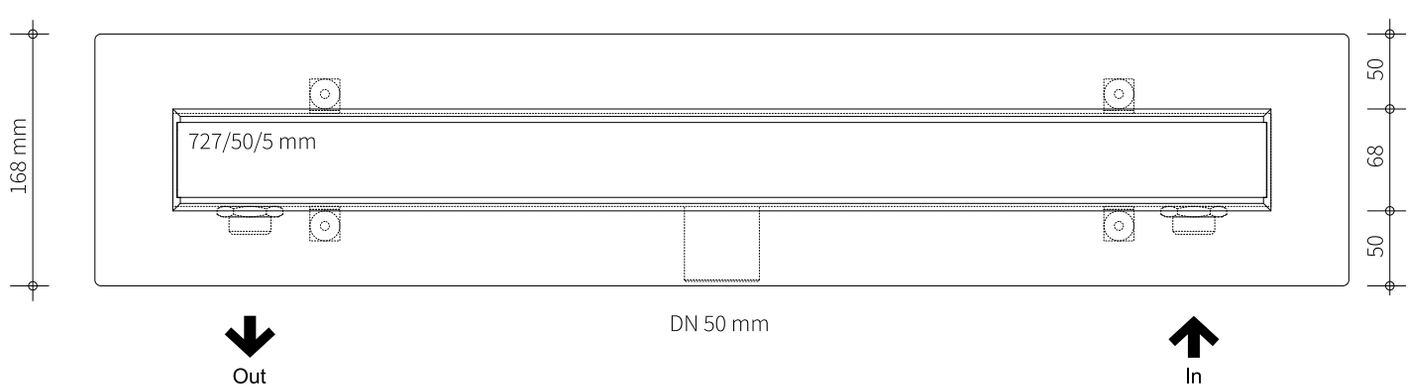
Joulia SA / Vers. April 2018